ELECTRONIX EXPRESS
Tel. (732) 381-8020 • Fax (732) 381-1006
RSR Electronics, Inc.
Tel. (732) 381-8777 • Fax (732) 381-1572

365 Blair Road
Avenel, NJ 07001, U.S.A.
http://www.elexp.com (email: electron@elexp.com)

20X2 LCD CHARACTER MODULE

Part No. 08LCD11

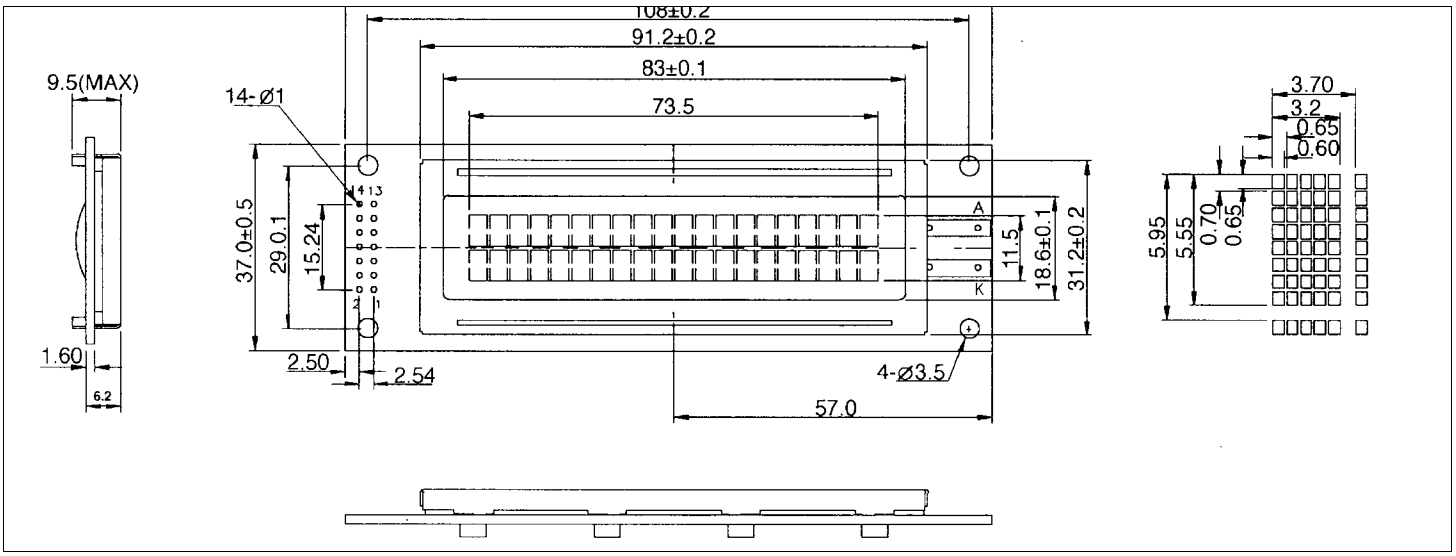

PERFORMANCE FEATURES	
CL FLUID:	TN
POLARIZER	REFLECTIVE
COLOR	
BACKLIGHT	NA
TEMPERATURE RANGE	STANDARD
CONTROLLER	KS0066/SAMSUNG

PIN	SIGNAL	PIN	SIGNAL
1	VSS	8	DB1
2	VDD	9	DB2
3	V0	10	DB3
4	RS	11	DB4
5	R/W	12	DB5
6	E	13	DB6
7	DB0	14	DB7